Source Mounting Wall Light | IP 65



AGXTD3032

Light Source	30×0.07W
Lens	N/A
Selected Degree(°)θ1/2	N/A
Input Voltage (V)	DC 24/ 240
Operating current(MA)	24V=135 240V=14
Consumption (W)	24V=3.2 240V=3.2
Luminance(LM)	87
IK	09

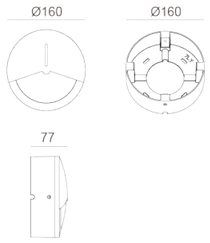



AGXWD3032

Light Source	30×0.07W
Lens	N/A
Selected Degree(°)θ1/2	N/A
Input Voltage (V)	DC 24/ 240
Operating current(MA)	24v=135 240V=14
Consumption (W)	24v=3.2 240V=3.2
Luminance(LM)	101
IK	09

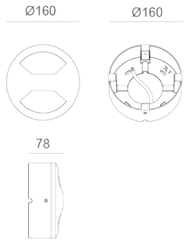



AGXYD1234

Light Source	12×0.5W NICHIA
Lens	N/A
Selected Degree(°)θ1/2	N/A
Input Voltage (V)	DC 24/ 240
Operating current(MA)	24V=250 240V=45
Consumption (W)	24V=6 240V=6
Luminance(LM)	134
IK	09

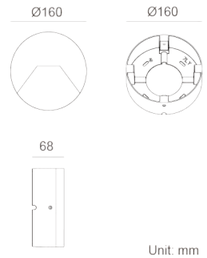

Unit: mm

Painting Color

Primary

Sanded Dark Grey
KAP 7037

Secondary

Sanded Dark Grey
KAP 7037

Sanded Bronze
KAP 7008

Specification

Housing & Mounting Base	ADC 12# Die-casting aluminum finishing or powder coated painting T=60-80μm Adhesion of ISO class 1/ASTM class 4B
Light Window	YD1234: UVstop & Fireproof PC T=1mm TD3032/ WD3032: UVstop & Fireproof PC T=2.5mm
Gasket	Tooling shaped seal
Sleeve	ADC
LED Type	SMD
LED Driver	Built in on/off driver
Operating Temperature	-20°C~40°C
Power Cable	Outside of luminaire (Without waterstopper) 12V/24V: H05RN-F 2×1.0mm², L=0.3m 120V/240V: H05RN-F 3×1.0mm², L=0.3m



Wiring Options

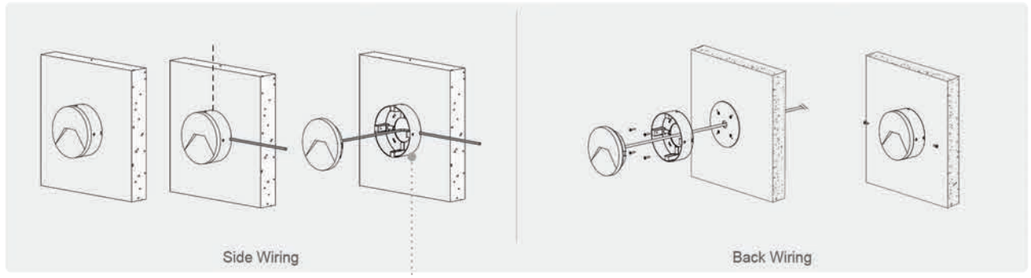

Features

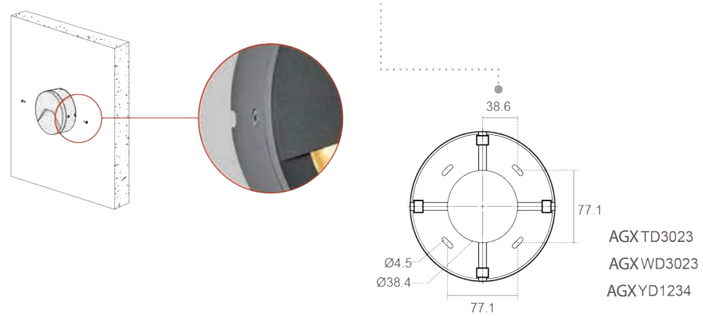

Source Mounting Wall Light IP 65



AGXJD0634

Light Source	6×0.5W
Lens	N/A
Selected Degree(°)θ1/2	N/A
Input Voltage (V)	DC 24/ 120 240
Operating Current(MA)	24V=100 120V=48 240V=27
Consumption (W)	24V=2.4 120V=3.3 240V=3.4
Luminance(LM)	48
IK	07

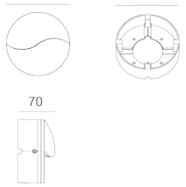



AGXKD1833

Light Source	18×0.15W
Lens	N/A
Selected Degree(°)θ1/2	N/A
Input Voltage (V)	DC 24/ 120 240
Operating Current(MA)	24V=105 120V=52 240V=32
Consumption (W)	24V=2.5 120V=4 240V=4.5
Luminance(LM)	157
IK	08

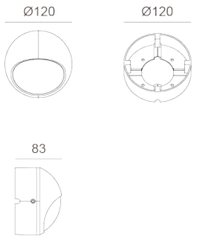



AGXLD2832

Light Source	28×0.1
Lens	N/A
Selected Degree(°)θ1/2	N/A
Input Voltage (V)	DC 24/ 240
Operating Current(MA)	24V=125 240V=15
Consumption (W)	24V=3 240V=3.5
Luminance(LM)	18
IK	08

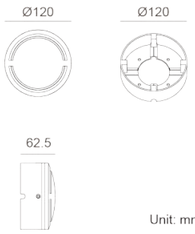

Unit: mm

Painting Color

Primary



Sanded Dark Grey
KAP 7037

Secondary



Sanded Black
RAL 9005



Sanded Bronze
KAP7008

Specification

Housing & Mounting Base	ADC 12# Die-casting aluminum finishing or powder Painting T=60-80μm.Adhesion of ISO class 1/ASTM class 4B
Light Window	UV stop & Fireproof PC T=2.5mm
Gasket	Tooling shaped seal
LED Type	SMD
LED Driver	Built in on/off driver
Operating Temperature	-20°C~40°C
Power Cable	Outside of luminaire (Without waterstopper) 12V/24V: H05RN-F 2×1.0mm², L=0.3m 120V/240V: H05RN-F 3×1.0mm², L=0.3m

aglighting.mx IP65 OUTDOOR RATED RoHS COMPLIANT CE



Beam Demo

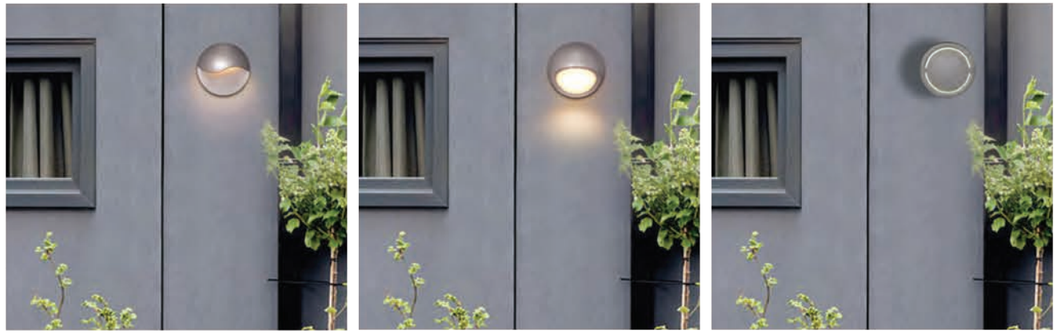

AGXJD0634 AGXKD1833 AGXLD2832

Wiring Options

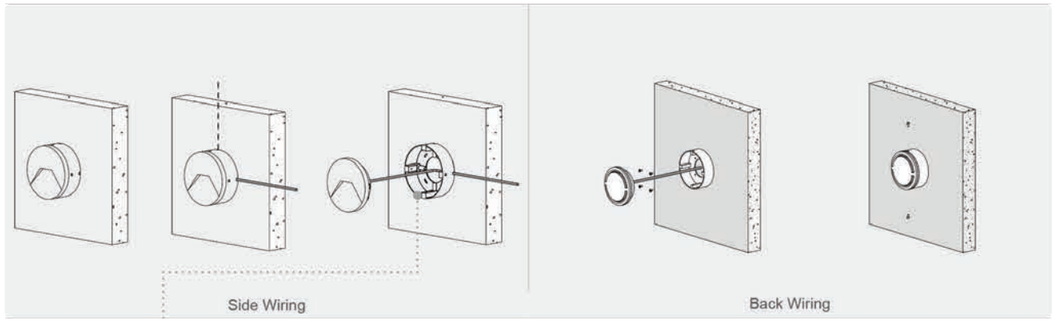

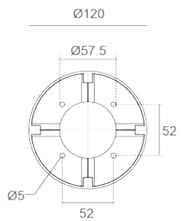

AGXJD0634
AGXKD1833
AGXLD2832

