Surface Mounting Wall Light | IP 65



AGXGMB0124

Light Source	1x5W
Lens	B106
Selected Degree(°)θ1/2	20°
Input Voltage (V)	DC 24/ 240
Operating Current(MA)	24V= 292 240V= 28
Consumption (W)	24V=7 240V= 6.5
Luminance(LM)	450
IK	07

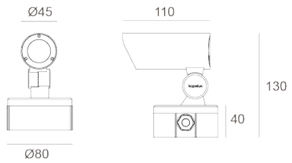



AGXHMB0127

Light Source	1x8W
Lens	B107
Selected Degree(°)θ1/2	25°
Input Voltage (V)	DC 24/ 240
Operating Current(MA)	24V=500 240V= 49
Consumption (W)	24V=12 240V= 10.5
Luminance(LM)	24V=1015
IK	07

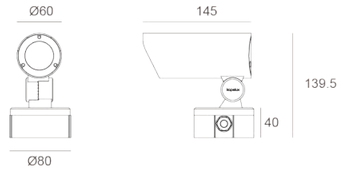



AGXJMB0169

Light Source	1x16W
Lens	B112
Selected Degree(°)θ1/2	28°
Input Voltage (V)	DC 24 / 240
Operating Current(MA)	24V=700 240V= 89
Consumption (W)	24V=17 240V= 18.5
Luminance(LM)	1689
IK	07



AGXKMB0171

Light Source	1x22W
Lens	B125
Selected Degree(°)θ1/2	28°
Input Voltage (V)	DC 24/ 240
Operating Current(MA)	24V=1000 240V= 101
Consumption (W)	24V=24 240V= 23
Luminance(LM)	2300
IK	07

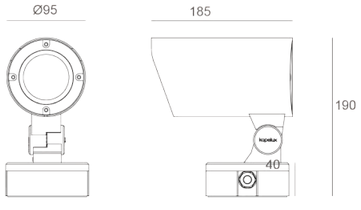



AGXLMB0174

Light Source	1X30W
Lens	B113
Selected Degree(°)θ1/2	25°
Input Voltage (V)	DC 24/ 240
Operating Current(MA)	24V= 1458 240V= 151
Consumption (W)	24V= 35 240V= 35
Luminance(LM)	3300
IK	07

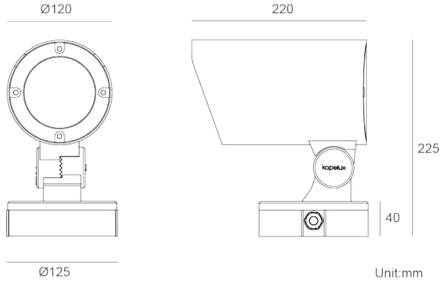

Unit:mm

aglighting.mx

IP65 OUTDOOR RATED RoHS COMPLIANT CE

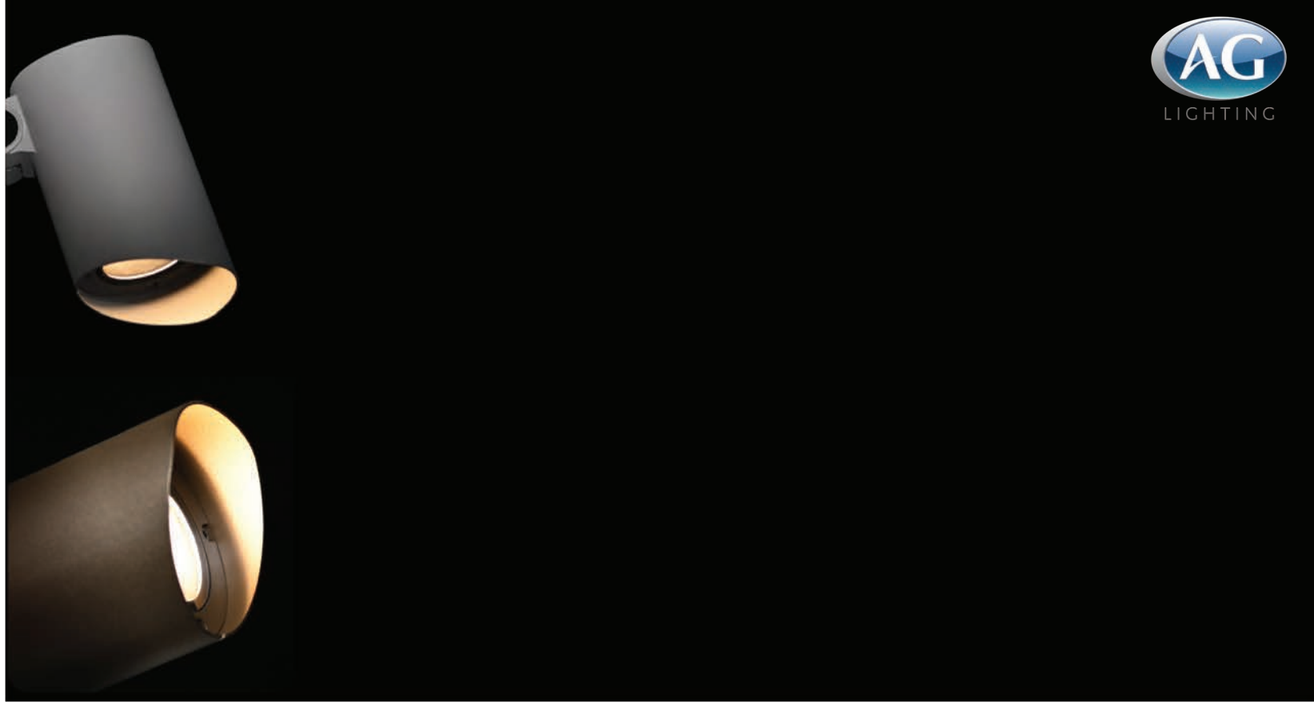

AG LIGHTING

Painting Color	
Primary	
	Sanded Black AL 9005
Secondary	
	Sanded Dark Grey AP 7037
	Sanded Bronze AP 7008

Family Items

Garden Light

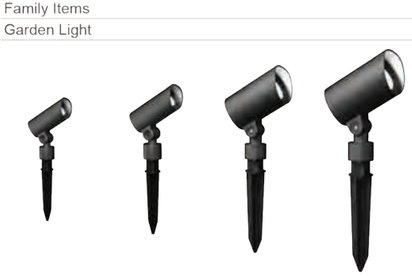

AGXGSB0124 AGXHSB0127 AGXJSB0169 AGXKSB0171

See page 22

Family Item

Garden Light



AGXCXB012 AGXDXB0127 AGXEXB0169 AGXPB0171 AGXQB0174

See page

Air valve

1. To prevent moisture from entering the fixture along with the air during switching, caused by thermal expansion and contraction.

2. When there is a large temperature difference between the inside and outside of the fixture, it can release heat and moisture.



Tilt Adjustable

*Approximately

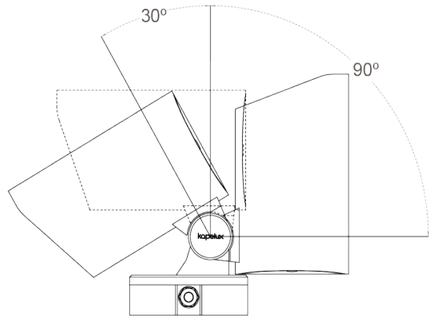

Anti Glare Louver



Overview



07PKMB0171

Accessories (Optional)

Anti Glare Louver



Mh136 Mh127 Mh128 Mh134 Mh135



Item	Fitted Model
Mh136	AGXGMB0124
Mh127	AGXHMB0127
Mh128	AGXJMB0169
Mh134	AGXKMB0171
Mh135	AGXLMB0174

- Optional Honeycomb Louver.
- The measured luminous flux data does not contain the Honeycomb Louver, and the data containing is reduced 20 to 30%.



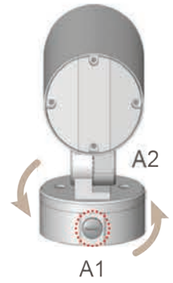

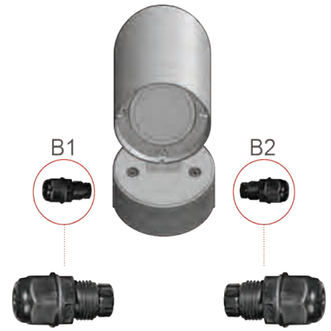

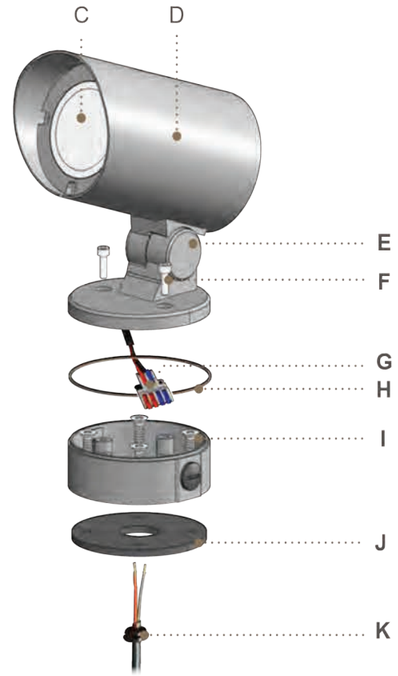

A1/A2	PG9 Side Rubber Plug
B1/B2	PG9 Cable Gland
C	Light Window
D	Housing
E	Dial Scale
F	Mounting Screws(for srcuring housing)
G	3 Ways Terminal
H	Waterproof silicone gasket
I	Mounting Screws(for securing base)
J	Elastic Waterproof Gasket Plate
K	Waterproof Rubber Plug